$$u_0 = f(i_0, i_1, i_2)$$

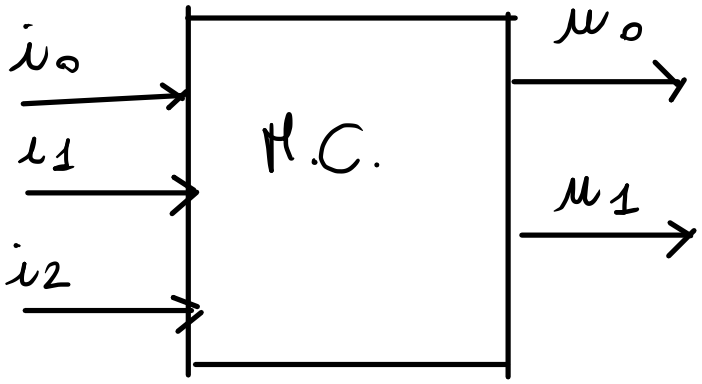

i_2	i_1	i_0	u_1	u_0
.	.	.		

PROGETTARE 3 VAR $x_2\, x_1\, x_0 = X$

$y_1 = 1$ se ≥ 2 bit alti in X, 0 altrimenti

$y_0 = 1$ se $X \in [2;5]$

	x_2	x_1	x_0	y_1	y_0
0	0	0	0	0	0
1	0	0	1	0	0
2	0	1	0	0	1
3	0	1	1	1	1
4	1	0	0	0	1
5	1	0	1	1	1
6	1	1	0	1	0
7	1	1	1	1	0

FORMA CANONICA DI TIPO P

SOMMA DI PRODOTTI

$$y_1 = \underbrace{\bar{x}_2 x_1 x_0}_{\text{MINTERMINE}} + x_2 \bar{x}_1 x_0 + x_2 x_1 \bar{x}_0 + x_2 x_1 x_0$$

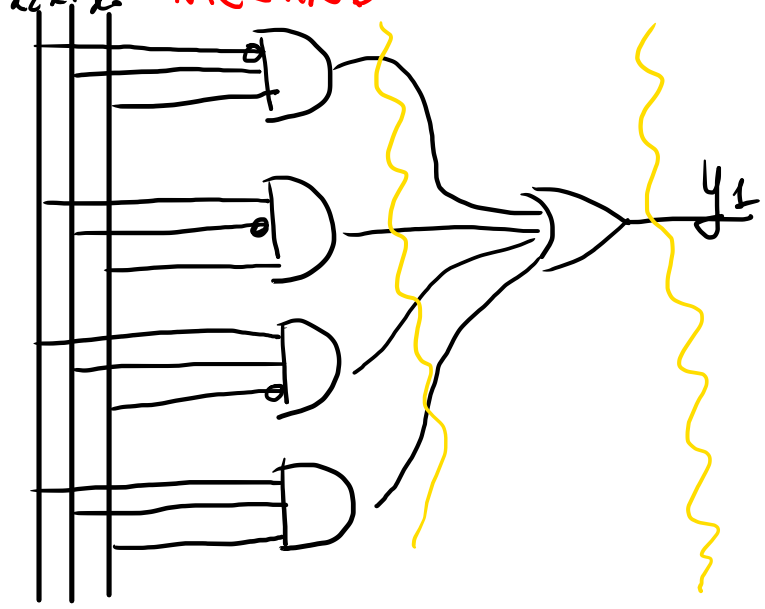

MULTIPLEXER

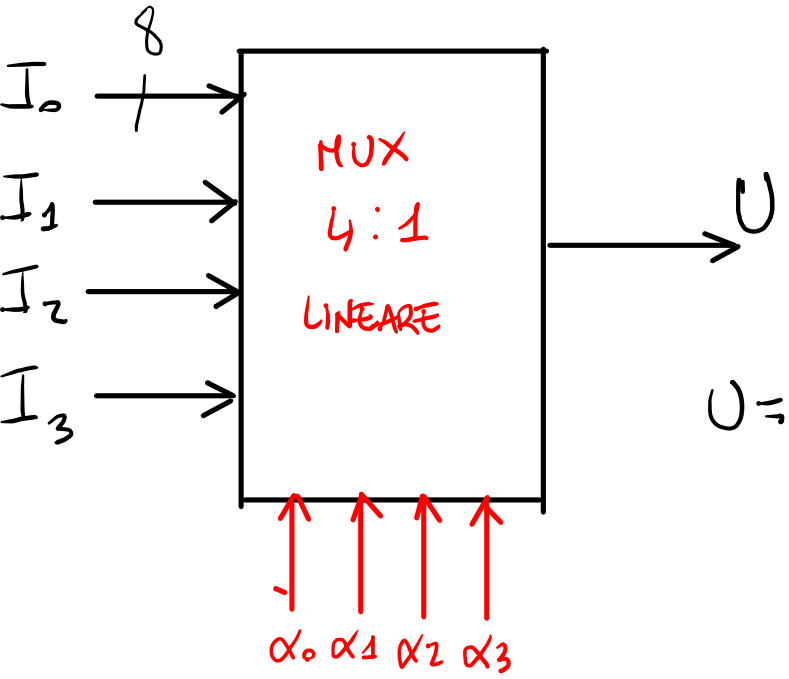

$$\sum_i \alpha_i = 1$$

I_0 I_1 I_2 I_3	α_0 α_1 α_2 α_3	U
	1 0 0 0	I_0
	0 1 0 0	I_1
	0 0 1 0	I_2
	0 0 0 1	I_3
		—

$$U = I_0 \alpha_0 + I_1 \alpha_1 + I_2 \alpha_2 + I_3 \alpha_3$$

DECODER

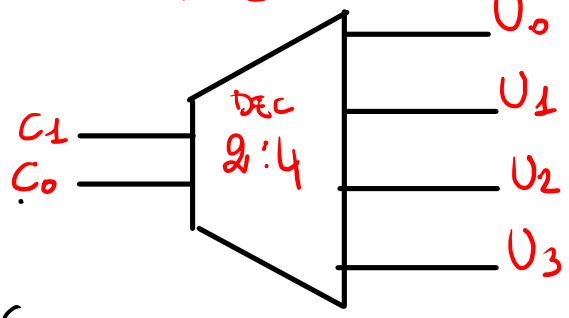

C_1 C_0	U_0 U_1 U_2 U_3
0 0	1 0 0 0
0 1	0 1 0 0
1 0	0 0 1 0
1 1	0 0 0 1

C_1 C_0
0 0
1 0

MULTIPLEXER INDIRIZZABILE

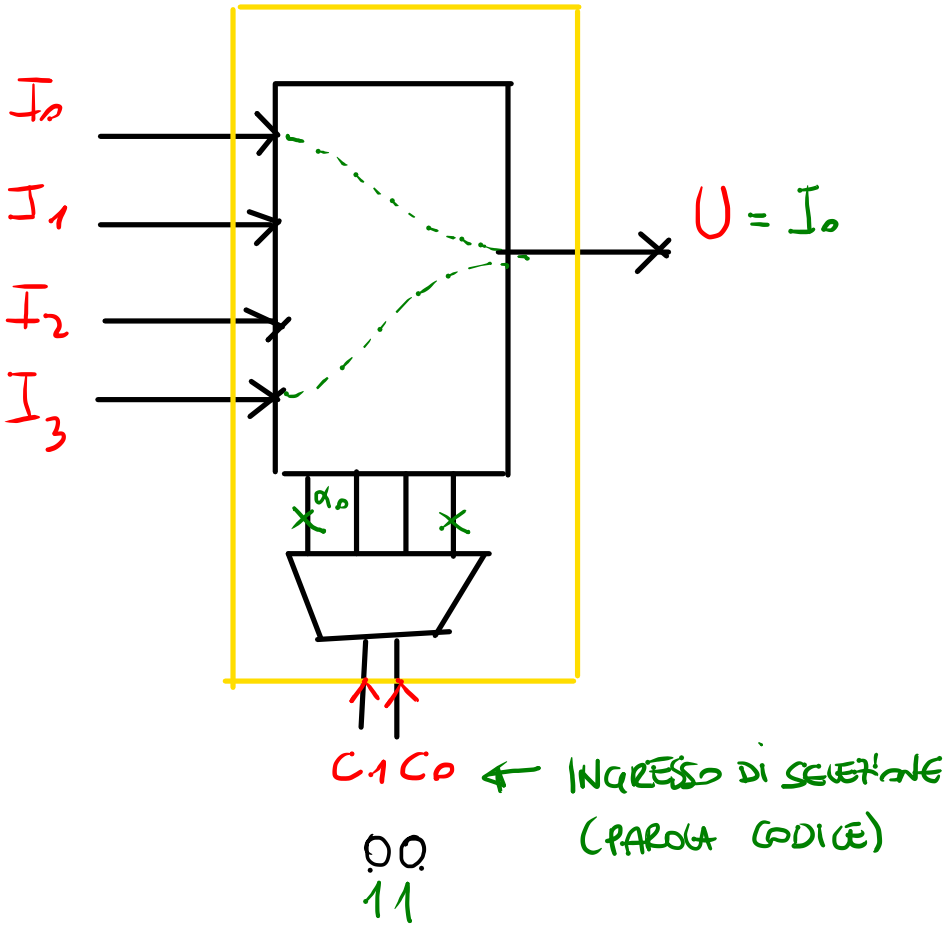

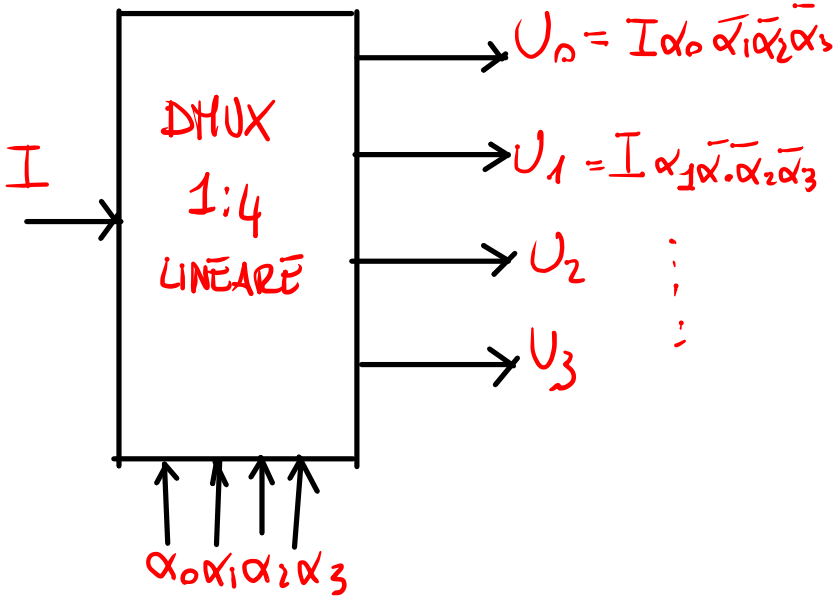

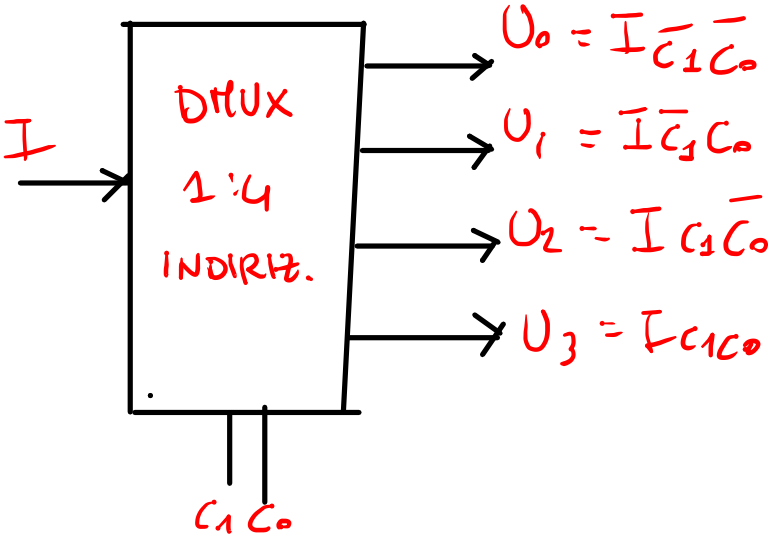

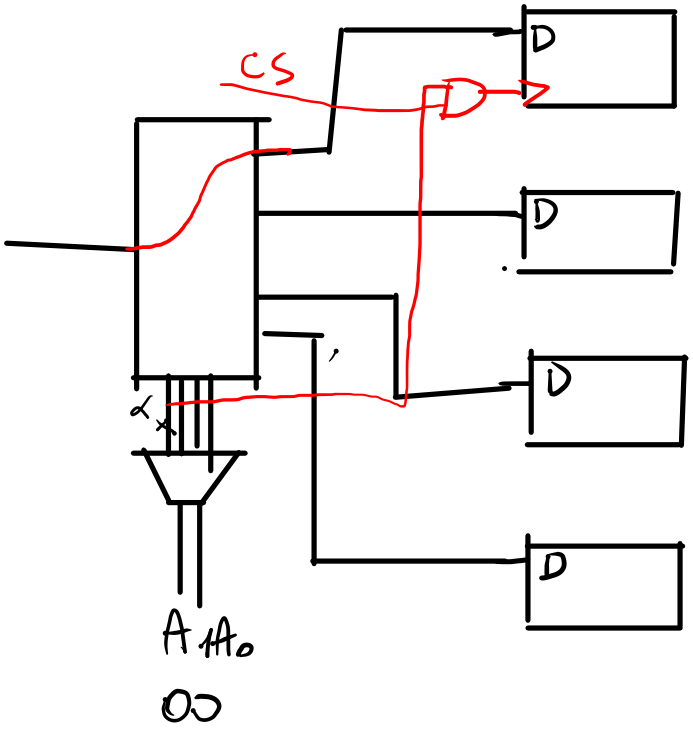

4×1

REALIZZARE

MUX 32:1 A PARTIRE DA MUX 4:1

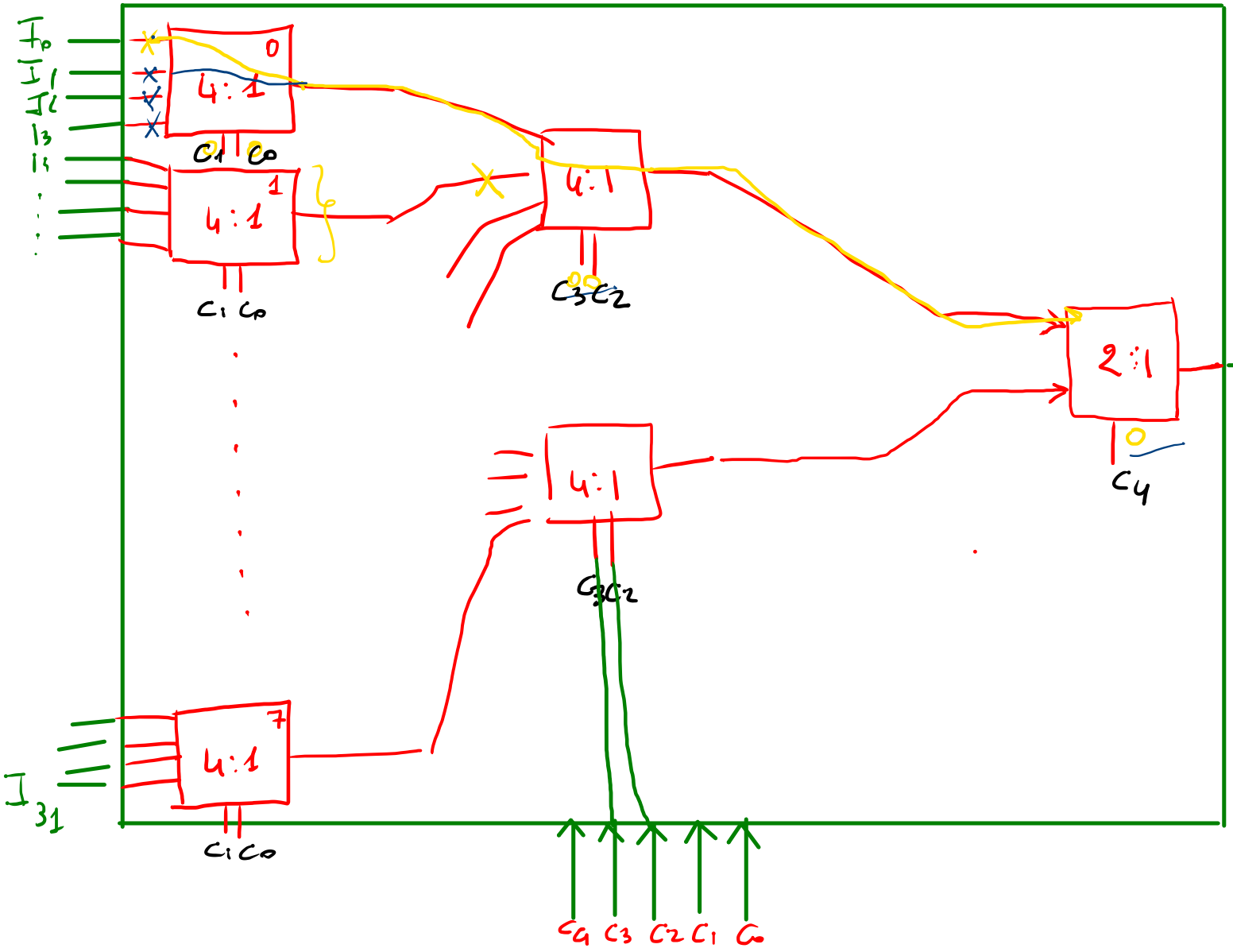

C_4	C_3	C_2	C_1	C_0
0	0	0	0	0
0	0	0	0	1
0	0	0	1	0
0	0	0	1	1
0	0	1	0	0

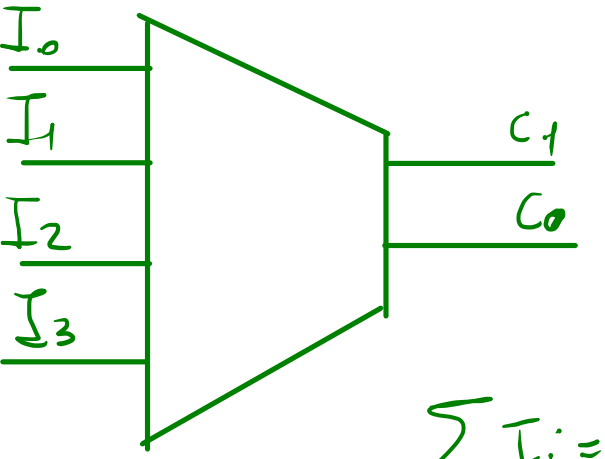

$\sum I_i = 1$

I_0	I_1	I_2	I_3	C_1	C_0
1	0	0	0	0	0
0	1	0	0	0	1
0	0	1	0	1	0
0	0	0	1	1	1

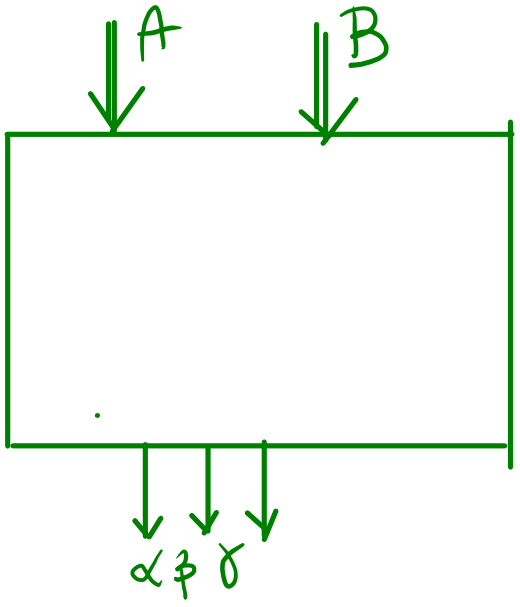

$A > B \quad \alpha = 1$

$A < B \quad \beta = 1$

$A = B \quad \gamma = 1$

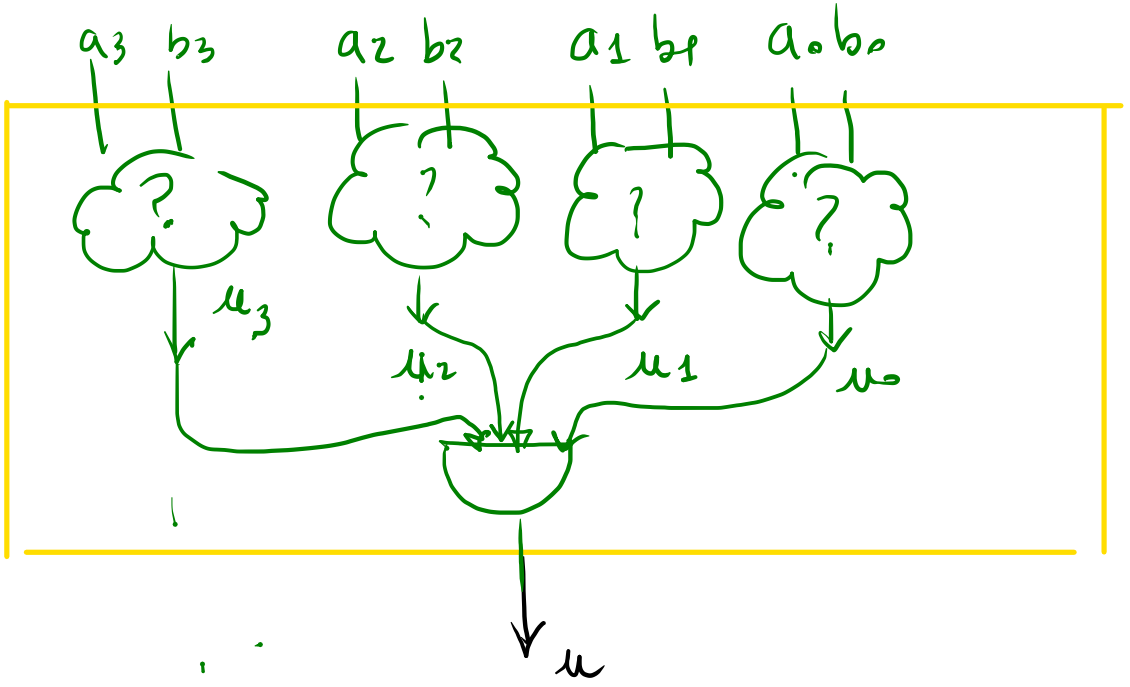

$A = a_3 a_2 a_1 a_0$

$B = b_3 b_2 b_1 b_0$

$a_i b_i$	u_i
0 0	1
0 1	0
1 0	0
1 1	1

$u_i = \bar{a}_i \bar{b}_i + a_i b_i$